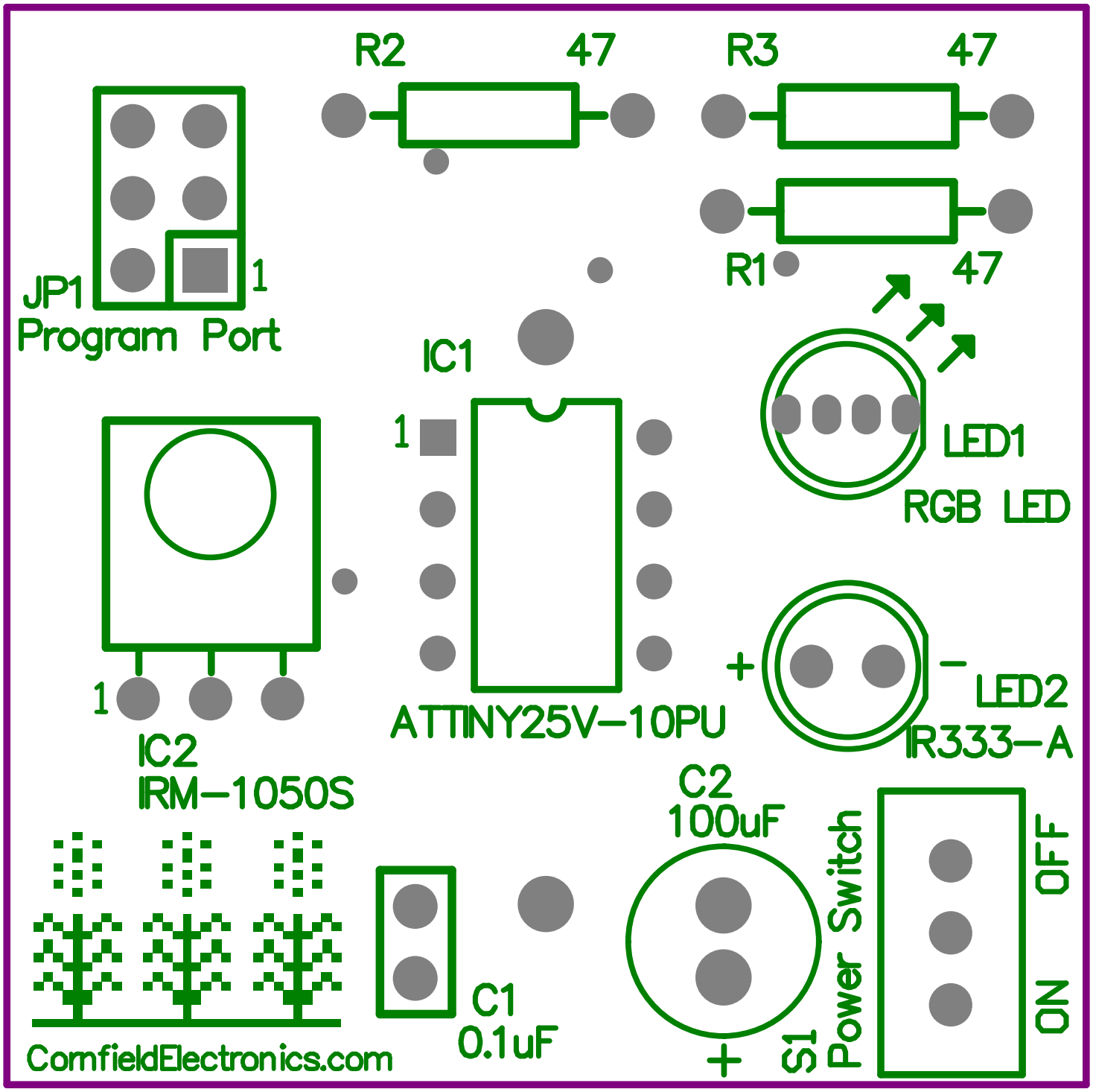
R2
47
R3
47
R1
47
JP1
1
Program Port
IC1
1
ATTINY25V-10PU
LED1
RGB LED
1
IC2
IRM-1050S
+
-
LED2
IR333-A
C2
100uF
C1
0.1uF
+
S1
Power Switch
OFF
ON
ComfieldElectronics.com

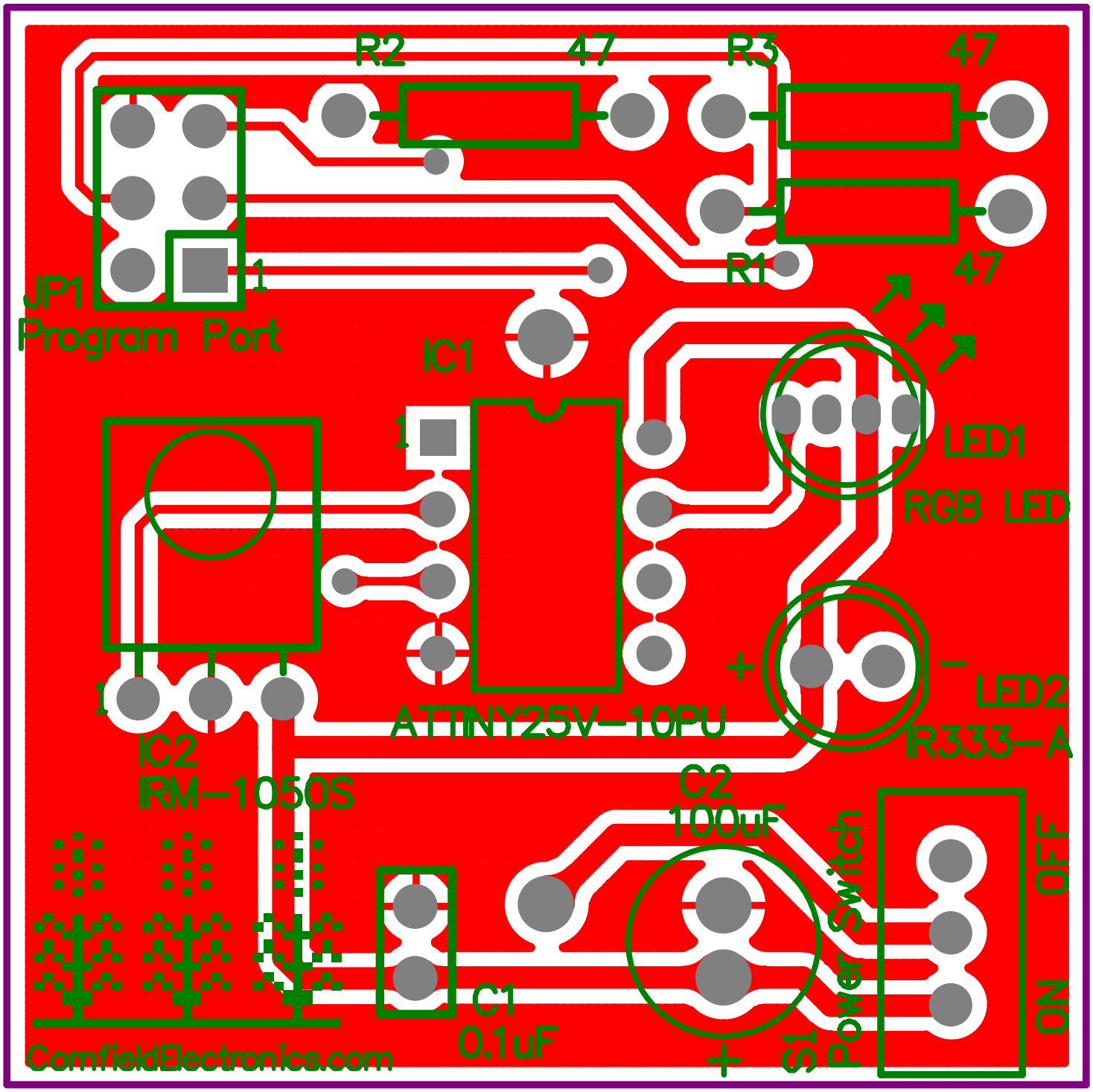
R2
47
R3
47
R1
47
JP1
Program Port
1
IC1
1
LED1
RGB LED
+
-
LED2
IR333-A
1
IC2
IRM-1050S
ATTINY25V-10PU
C2
100uF
Power Switch
OFF
ON
C1
0.1uF
+
ST
ComfieldElectronics.com

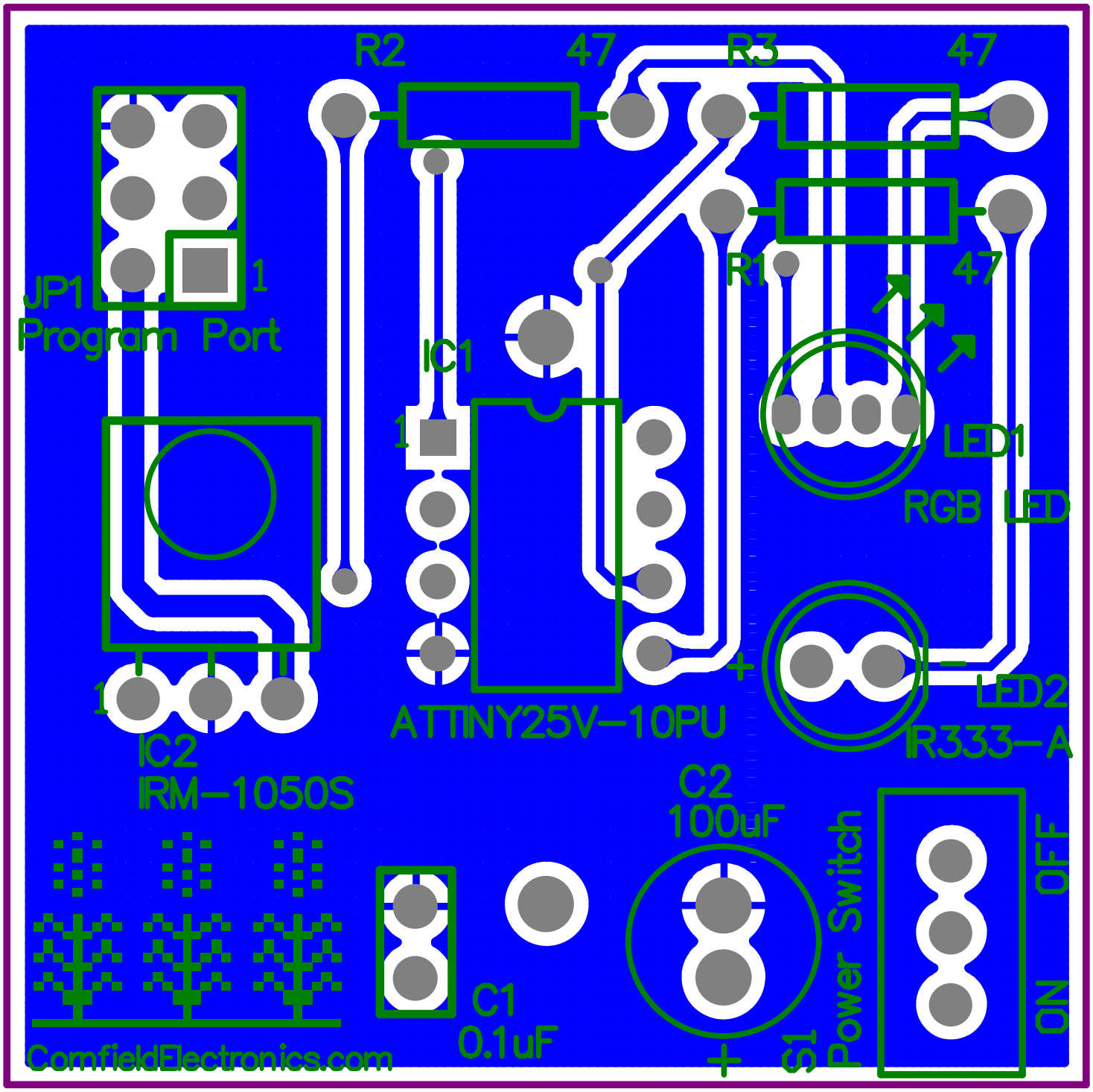
R2
47
R3
47
JP1
1
Program Port
IC1
1
R1
47
LED1
RGB LED
1
IC2
IRM-1050S
ATTINY25V-10PU
+
LED2
IR333-A
C2
100uF
C1
0.1uF
+
S1
Power Switch
OFF
ON
ComfieldElectronics.com

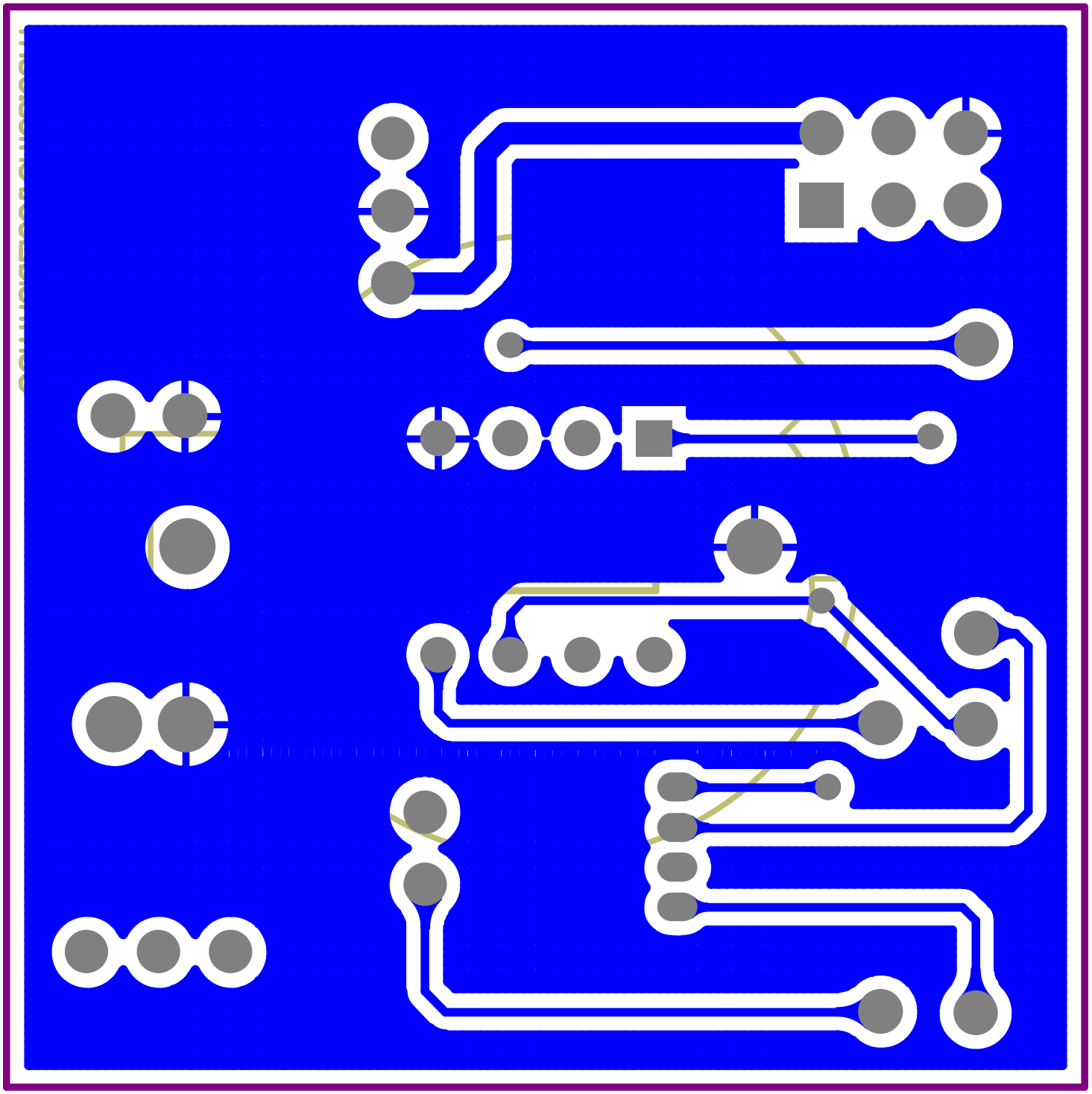

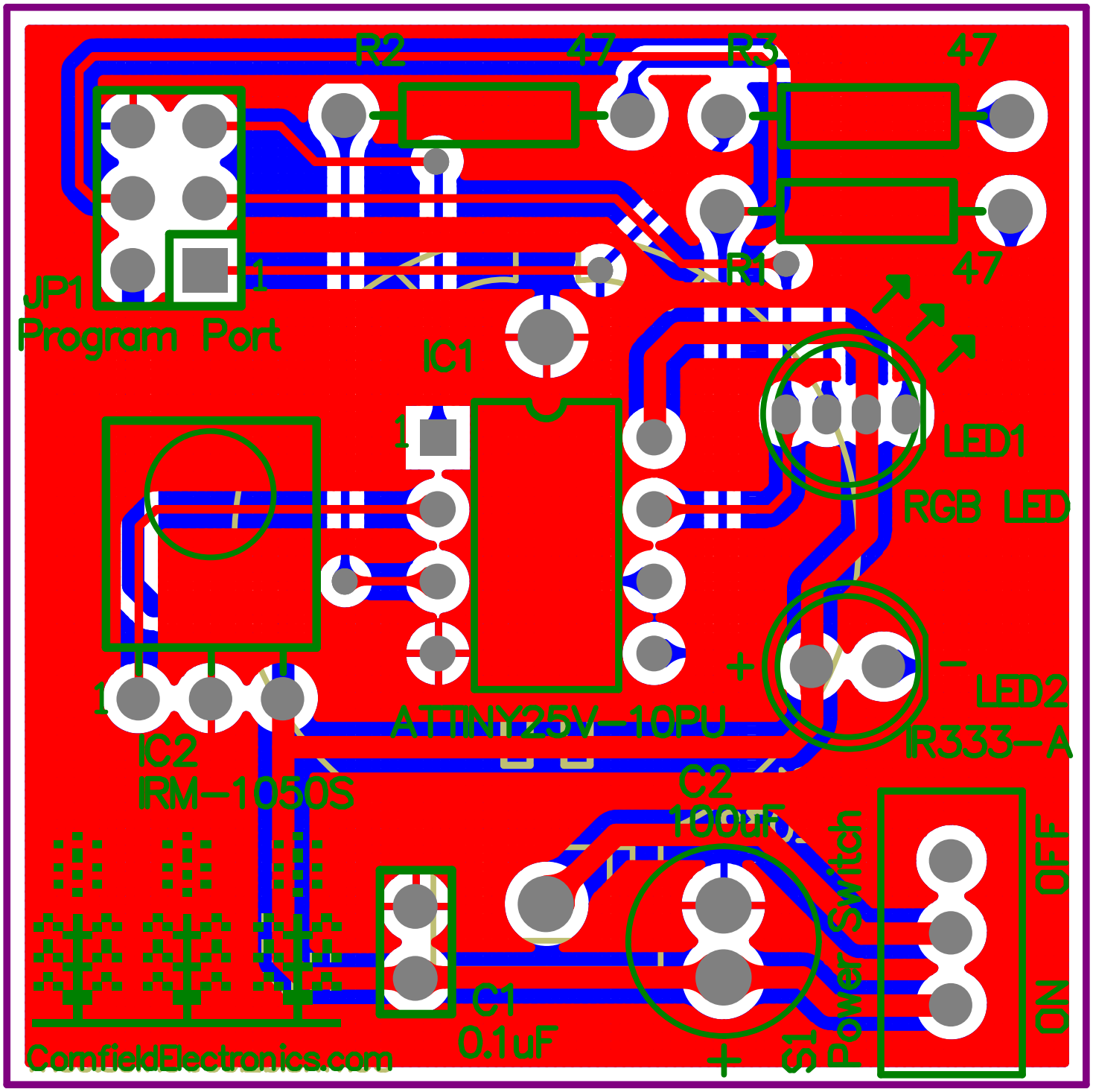
R2
47
R3
47
JP1
Program Port
1
R1
47
IC1
1
LED1
RGB LED
1
IC2
IRM-1050S
ATTINY25V-10PU
+
-
LED2
IR333-A
C2
100uF
Power Switch
OFF
ON
C1
0.1uF
+
ComfieldElectronics.com